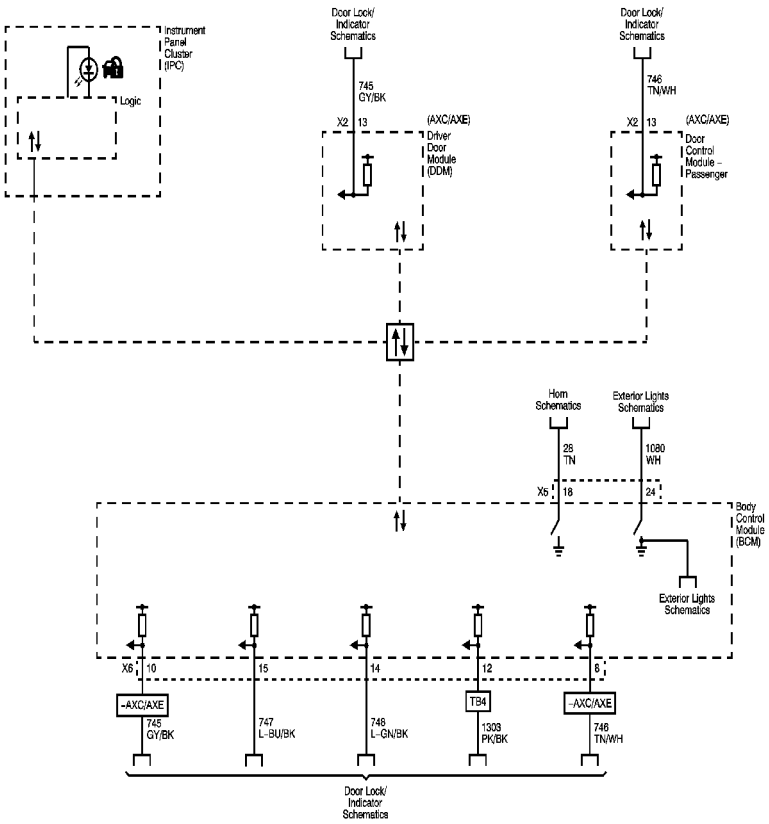

© 2010 General Motors Corporation. All rights reserved.